North Dakota Department of Transportation **NDDOT Contract #** 50141404

INVITATION TO BID

Bid Number: 760-06-14-050	Bid Opening Date & Time: 09/04/2014 02:00 PM
Items: Cutting Edges	Buyer: Vanessa Brosten
Bid Mailing Address: 608 East Boulevard Avenue	Telephone Number: 701-328-2571
City, State, Zip: Bismarck, North Dakota 58505	Email: vbrosten@nd.gov
Contract Period: 09/22/2014 TO 07/31/2015	Date Prepared: 08/20/2014

BID RESPONSE

Please submit your bid response on the attached forms in conformance with the instructions and specifications in the NDAC 04-12-01 – 04-12-16. One copy of your bid response must be returned to the North Dakota Department of Transportation (NDOT) prior to the time and date specified for the bid opening. Bid responses received after the time and day specified for the bid opening will be rejected. Mark envelope with word "BID" and the opening time and date. **If your bid response is accepted by NDDOT, then your bid response will constitute a binding contract.**

CONTRACT

This contract is made and entered into by and between NDDOT for the state of North Dakota (hereinafter state) and

Vendor Name **KENNAMETAL INC.**	Vendor Address **1600 TECHNOLOGY WAY, LATROBE, PA 15650**

(hereinafter vendor). In consideration of and for the acceptance by the state of the offer made by the vendor pursuant to the bid response, the vendor agrees and promises to sell, furnish, and deliver to the state, at the time, places, and prices specified in the bid response, all goods, merchandise, supplies, commodities, equipment, or other items contained in the bid response and for which the vendor has been awarded this contract by the state. The vendor shall fully perform this contract in accordance with the terms and conditions contained in the bid response including all specifications, rules, or regulations mentioned therein, and shall comply with all applicable provisions of the NDAC 04-12-01 – 04-12-16 promulgated by the State Purchasing Division; such manual being made a part of this contract by reference. The Risk Management Appendix and Civil Rights Appendix, both attached, are hereby incorporated into and made a part of this agreement.

The following must be completed by the vendor; failure to do so may result in the rejection of the vendors bid proposal.

Vendor Name **KENNAMETAL INC.**		
Mailing Address **P.O. BOX 231, LATROBE, PA 15650 (MAIL) 1600 TECHNOLOGY WAY, LATROBE, PA 15650 (COURIER)**		
Telephone Number **800-564-9489**	Fax Number **724-539-5079**	E-mail Address **Terry.Manway@kennametal.com**

Eric V. Gentis, Vice President & General Manager, Earthcutting

Name & Title (Type or Print)

X

Signature

August 27, 2014

Date

To be signed by **Owner; Partner; Corp. Pres., Vice Pres., or other authorized Corp. Officer** or bid may be rejected. (if signed by other authorized Corp. Officer, please attach copy of Power of Attorney or other documentation showing authority to sign.)

FOR ND DEPARTMENT OF TRANSPORTATION USE ONLY Accepted by the state according to provisions of award.

Authorized Signature Grant Levi		Date 9/17/14
Recommended for approval	Date 9-15-14	Approximate contract amount $ unknown

NDDOT North Dakota Department of Transportation

APPROVED as to execution this 16 day of September 2014
ATTORNEY GENERAL
By
SPECIAL ASST ATTORNEY GENERAL

CLA 7480 (Div. 50)

North Dakota Department of Transportation
INVITATION TO BID

Bid Number: 760-06-14-050	Bid Opening Date & Time: 09/04/2014 02:00 PM
Items: Cutting Edges	Buyer: Vanessa Brosten
Bid Mailing Address: 608 East Boulevard Avenue	Telephone Number: 701-328-2571
City, State, Zip: Bismarck, North Dakota 58505	Email: vbrosten@nd.gov
Contract Period: 09/22/2014 TO 07/31/2015	Date Prepared: 08/20/2014

BID RESPONSE

Please submit your bid response on the attached forms in conformance with the instructions and specifications in the NDAC 04-12-01 – 04-12-16. One copy of your bid response must be returned to the North Dakota Department of Transportation (NDOT) prior to the time and date specified for the bid opening. Bid responses received after the time and day specified for the bid opening will be rejected. Mark envelope with word "BID" and the opening time and date. **If your bid response is accepted by NDDOT, then your bid response will constitute a binding contract.**

CONTRACT

This contract is made and entered into by and between NDDOT for the state of North Dakota (hereinafter state) and

Vendor Name **KENNAMETAL INC.**	Vendor Address **1600 TECHNOLOGY WAY, LATROBE, PA 15650**

(hereinafter vendor). In consideration of and for the acceptance by the state of the offer made by the vendor pursuant to the bid response, the vendor agrees and promises to sell, furnish, and deliver to the state, at the time, places, and prices specified in the bid response, all goods, merchandise, supplies, commodities, equipment, or other items contained in the bid response and for which the vendor has been awarded this contract by the state. The vendor shall fully perform this contract in accordance with the terms and conditions contained in the bid response including all specifications, rules, or regulations mentioned therein, and shall comply with all applicable provisions of the NDAC 04-12-01 – 04-12-16 promulgated by the State Purchasing Division; such manual being made a part of this contract by reference. The Risk Management Appendix and Civil Rights Appendix, both attached, are hereby incorporated into and made a part of this agreement.

The following must be completed by the vendor; failure to do so may result in the rejection of the vendors bid proposal.

Vendor Name **KENNAMETAL INC.**		
Mailing Address **P.O. BOX 231, LATROBE, PA 15650 (MAIL) 1600 TECHNOLOGY WAY, LATROBE, PA 15650 (COURIER)**		
Telephone Number **800-564-9489**	Fax Number **724-539-5079**	E-mail Address **Terry.Manway@kennametal.com**

Eric V. Gentis, Vice President & General Manager, Earthcutting

Name & Title (Type or Print)

X

Signature

September 2, 2014

Date

To be signed by **Owner; Partner; Corp. Pres., Vice Pres., or other authorized Corp. Officer** or bid may be rejected. (if signed by other authorized Corp. Officer, please attach copy of Power of Attorney or other documentation showing authority to sign.)

FOR ND DEPARTMENT OF TRANSPORTATION USE ONLY Accepted by the state according to provisions of award.

Authorized Signature		Date
Recommended for approval	Date	Approximate contract amount $

NDDOT North Dakota Department of Transportation

CLA 7480 (Div. 50)

MAILING INSTRUCTIONS

Mail only one completed and signed request for bid document per envelope, unless instructed otherwise. Request for bid documents not signed or received after the date and time specified in the request for bid will be rejected.

BID IS: ☒ SEALED ☐ NOT SEALED

Address the envelope containing your response in the following manner:

BID NUMBER - 760-06-14-050
BID OPENING DATE/TIME - September 4, 2014; 2:00 PM Central
N. D. DEPT. OF TRANSPORTATION
PROCUREMENT SECTION
608 E BOULEVARD AVE
BISMARCK ND 58505-0700

Sealed bids will be received for furnishing "**CUTTING EDGES**" as per the following instructions and specifications. To be considered, this bid form must be completed in its entirety and received by the **North Dakota Department of Transportation (NDDOT), 608 E. Boulevard Avenue, Bismarck ND 58505-0700 no later than 2:00 PM CENTRAL TIME, WEDNESDAY, SEPTEMBER 4, 2014,** at which time and place such bids will be properly opened and read.

REORDER PRICING IS REQUIRED IF REQUESTED IN THIS DOCUMENT.

BIDDERS INSTRUCTIONS

1. **Acceptance/Rejection/Waiver.** The state of North Dakota reserves the right to accept or reject any or all bids and to waive minor irregularities or technicalities, provided such waiver does not substantially change the offer or provide a competitive advantage to any vendor, in the judgment of the state.

2. **Affirmative Action.** The contractor will take affirmative action in complying with all Federal and State requirements concerning fair employment and employment of individuals with disabilities, and concerning the treatment of all employees without regard to discrimination by reason of race, color, religion, sex, national origin, or disability.

3. **Assistance to Bidders with a Disability.** Bidders with a disability that need an accommodation must contact the Procurement Officer prior to the deadline for receipt of bids so that reasonable accommodations can be made.

4. **Alterations and/or Corrections.** The person signing the bid response must initial any or all manual alterations and/or corrections to the bid response. Those bid responses with alterations and/or corrections that are not initialed may be rejected.

5. **Award.** Award will be made to a responsive, responsible bidder with the lowest price considering conformity with specifications, terms of delivery, quality, and serviceability. NDDOT reserves the right to consider bids varying in minor respects from any specific requirements herein, but judged to meet the intent of this request.

Contracts are not awarded at the bid opening. Bid responses will be firm for 30 days, unless stated otherwise.

6. **Awards, Splitting of.** The state reserves the right to make awards by item, groups of items, or on the total low bid for all the items specified as indicated in the detailed specifications. Bidders interested only in the total low bid for all items are to state 'all or nothing' on their bid response.

7. **Bidder Checklist.** HAVE YOU REMEMBERED TO:
   - Bid F.O.B. Destination (Ship To: Address) Freight Prepaid.
   - Mark envelope as indicated.
   - Review Standard Terms and Conditions contained in this solicitation.
   - Sign your bid on the cover sheet.
   - Initial all bid/pricing changes you made.
   - Bid responses must be submitted in ink or type written.
   - Review and complete all requirements contained in this solicitation to ensure compliance.

8. **Bidder's Responsibility and Late Bids.** It is the bidder's responsibility to ensure that a bid response is physically deposited with the NDDOT Procurement Office prior to the date and time specified for the opening. Late

bid responses will not be opened and will be rejected and returned regardless of the degree of lateness or the reasons. It is the bidder's responsibility to comply with the State of North Dakota's laws and regulations.

9. **Bid Summary.** Bid summaries are available when the bid has been awarded. When bids are issued using the State's electronic bidding system, the bid summary will be posted and available for download from: http://www.nd.gov/spo/

Bid summaries will be mailed to those bidders who supply a self-addressed, stamped envelope with their bid response. A copy of the bid summary may also be obtained by visiting the NDDOT Procurement Office during normal working hours.

10. **Bid Bond.** Waived in this instance: however, bidder(s) failing to enter into a contract with this office, upon notification of award, may be subject to removal from the bidder's list.

11. **Clarifications, Bid Changes and Questions Deadline.** The Procurement Officer is the point of contact. Any irregularities, lack of clarity, requested bid changes and all questions regarding this bid and the procurement process must be addressed to the Procurement Officer referenced on the first page of this document **not later than end of business August 27, 2014.** (Contact information is indicated on cover page). If a bid amendment is required, it will generally be issued after this date.

The bidder is cautioned that the requirement of this solicitation can be altered only by written amendments and that verbal communications from whatever source are of no effect.

12. **Definitions.**
- Bidder - any person or firm submitting a competitive bid in response to a solicitation.
- Bid summary - a summary of all bid responses received by the NDDOT Procurement Office.
- Bid response - the executed document submitted by a bidder in response to a solicitation.
- Contract - a deliberate written agreement between two or more competent persons to perform specific act or acts.
- Contractor - any person or firm having a contract with a governmental body.
- Solicitation - the process of notifying prospective bidders that the state wishes to receive bids for furnishing goods or services.

13. **Deviation from Specifications Supplied by NDDOT.** Unless otherwise indicated by the bidder, it will be assumed that specifications will be met in all respects. Any deviation from the minimum specifications indicated herein must be clearly pointed out PRIOR TO THE DEADLINE FOR RECEIPT OF QUESTIONS; otherwise, it will be considered that the items offered are in strict compliance with these specifications, and the bidder will be held responsible.

14. **Electronic & Facsimile Bids.** Bid responses are not to be email attached or faxed to the NDDOT unless this transmittal method has been authorized by the Procurement Officer or bid document. (Contact the Procurement officer regarding additional requirements and exceptions.) Bid responses electronically submitted or faxed may be rejected as non-responsive.

15. **Freight/F.O.B. Destination.** Freight and transportation charges are to be included in the price of the products, unless otherwise specified in the solicitation. (F.O.B. - Free On Board).

16. **Indemnification.** The attached Risk Management will be incorporated into the contract. The successful Bidder may be required to furnish proof of insurance, as detailed in the Risk Management Appendix.

17. **Multiple Bid(s).** Bidders may submit more than one bid response(s) for the item(s) specified in the solicitation. Each bid submitted must comply in all aspects with the bid requirements and these instructions.

18. **Negotiation.** NDDOT reserves the right to negotiate with the successful bidder to ensure the best possible consideration is afforded to all concerned.

19. **Open Records.** After award, bid documents will be subject to the North Dakota open records law. Records are closed or confidential only if specifically stated in law. If a request for public information is received, the procurement officer will determine whether the information is an exception to the North Dakota open records law, and the information will be processed appropriately. Those interested in reviewing the bid file are to make arrangements with the NDDOT Procurement Office. The NDDOT Procurement Office hours are 8:00 a.m. - 12:00 p.m. and 1:00 p.m. - 5:00 p.m. Monday through Friday.

20. **Packaging.** All shipments are to be packaged according to accepted commercial practices to avoid damage in shipment.

21. **Performance Bond.** Successful bidders will not be required to furnish a performance bond; however, failure to perform satisfactorily will result in the immediate termination of the contract(s) and bidders may be subject to removal from the bidder's list.

22. **Preparation of Bid.** Bids will be accepted on NDDOT forms only. If the document is located on the State Procurement Office website, then bidder is to download the document and type or write their responses as indicated by the bid document. Alteration of the bid document may be cause for bid rejection. Bidders are cautioned to examine specifications and all instructions. Failure to do so will be at the bidder's risk.

23. **Pricing.** Unit prices are to be stated in United States currency and based on the unit of measurement specified in the solicitation, F.O.B. Destination, to the NDDOT delivery locations specified herein.

In the event of mathematical differences between the unit price and extended total, the unit price will prevail.

24. **Protest of Award.** An interested party may protest the award within seven days after receiving notice in accordance with N.D.C.C. 54-44.4-12 and N.D.A.C. 4-12-14.

25. **Receipt of Bids.** All sealed bids received by the NDDOT Procurement Office will be opened and read at 608 East Boulevard Avenue, Bismarck, North Dakota, at the time specified in the solicitation.

26. **Rejection.** Bid responses may be rejected if:

- The bid response is not legible.
- The bid response is not submitted on the form supplied.
- The bid response is not completed as requested.
- The bid response is completed and/or signed in pencil.
- The bid response is faxed to the procurement office.
- The bid response is not signed by an authorized company representative.
- The bid response is not responsive to the specifications or other requirements of the solicitation.
- Changes to the bid response are not initialed.
- The bid response is received after the time and date specified.
- The bidder has not met Vendor Registration requirements or is suspended or debarred.
- The bid document has been altered by the bidder.
- The bidder is determined to be not responsible (N.D.A.C. 4-12-11-04).
- The price is not fair and reasonable
- Or a combination of above.

27. **Signature.** The bid must be signed manually in ink. The name and title of the person signing the bid response must be typed or printed above the signature. The bid must be signed by **Owner, Partner, Corp. Pres., Vice Pres., or other authorized Corp. Officer** or the bid may be rejected. If signed by other authorized Corp. Officer or representative, please attach a letter signed by the Owner, Partner, Corp. Pres., or Vice Pres. indicating the individual has authority to enter into a contract on behalf of the company (or a Power of Attorney).

28. **Supplemental Terms and Conditions.** Bids including supplemental terms and conditions will be accepted, but supplemental conditions that conflict with any conditions contained in this ITB or that diminish the State's rights will be considered null and void. The State is not responsible for identifying conflicting supplemental terms and conditions before issuing a contract award.

After award of contract:

a) If a conflict arises between a supplemental term or condition included in the bid and a term or condition of the ITB, the term or condition of the ITB will prevail, and,
b) If the State's rights would be diminished as a result of application of a supplemental term or condition included in the bid, the supplemental term or condition will be considered null and void.

Changes, modifications, additions, or alterations to the bid document could be cause for rejection of the submitted bid at the sole discretion of the NDDOT. Contact the Procurement Officer in writing prior to the deadline for clarifications.

29. **Taxes.** The State does not pay sales tax or federal excise tax. The state sales tax exemption number is E-2001. The federal tax-free transaction number is 45-0309764.

30. **Vendor Registration.** Bids will be accepted from bidders who are not currently Approved Bidders for the State of North Dakota; however, the successful bidder may be required to become approved prior to award, in accordance with N.D.C.C. 54-44.4-09. To become an Approved Bidder, you must: 1) register with the North Dakota Secretary of State (fees apply), and 2) submit a completed Bidder List Application to the ND State Procurement Office. Registration instructions and forms are available on-line at: www.nd.gov/spo/vendor. Contact the ND State Procurement Office at 701-328-2683 or infospo@nd.gov for assistance.

31. **Withdrawal or changes to a bid response prior to the bid opening date and time.** A bidder may withdraw or make a change to his bid response prior to the bid opening date and time. The request to make a change or withdraw must be in writing by a representative of the firm. The request to withdraw or change must be signed by the bidder or his designated representatives.

32. **Withdrawals after the bid opening date and time.** Withdrawals after the bid opening will be allowed only upon written approval from the NDDOT Procurement Office. Vendors continually withdrawing bids after the bid opening may be removed from the Vendor Database.

GENERAL CONTRACT TERMS AND CONDITIONS

1. **Preparation of Bid.** Bids will be accepted on NDDOT forms only. The bidder's name shall be printed or typed on each sheet on which an entry is made. Bidders are cautioned to examine specifications and all instructions. Failure to do so will be at the bidder's risk. Any irregularities or lack of clarity in the invitation for bid must be brought to the attention of the Procurement Officer (Telephone: 701-328-2571, Fax: 701-328-0310, E-mail: vbrosten@nd.gov) as soon as possible. **Bidders shall indicate the manufacturer and provide complete specifications for materials being supplied at the time the bid is submitted. No bidder will be allowed to change any specification after the bid opening.**

2. **Applicable Law and Venue.** Any dispute arising out of this agreement will be resolved under the laws of the State of North Dakota.

3. **Binding Contract.** The acceptance of a bid response in writing by the purchasing agency constitutes a contract between the bidder and the State. Written acceptance from the purchasing agency will be in the form of a purchase order, notification of award, or contract. Any oral agreement or arrangement by a bidder with a State employee or purchasing agency will have no force or effect unless reduced to writing.

4. **Compliance with Laws, Nondiscrimination and Affirmative Action.** The contractor must, in performance of work under this contract, fully comply with all applicable federal, state or local laws, rules, regulations and policies, including those relating to nondiscrimination, affirmative action, accessibility and civil rights including Title VI of the Civil Rights Act of 1964. The contractor agrees to file all required reports on time, to make required payroll deductions, and to pay all taxes and premiums owed on time, including sales and use taxes and unemployment compensation and workers' compensation premiums. The contractor shall have and keep current at all times during the term of this contract all licenses and permits required by law.

5. **Contract Amendments, Waivers.** After a binding contract has been entered into, no changes (i.e. additions, substitutions, subcontracting or a price adjustment) may be made, unless prior approval has been obtained from the purchasing agency and Procurement Officer.

The terms of this contract shall not be waived, altered, modified, supplemented, or amended, in any manner whatsoever, except by written instrument signed by the parties. No waiver consent, modification or change of terms of this agreement shall bind either party unless in writing and signed by both parties .Such waiver, consent, modification, or change, if made shall be effective only in the specific instance and for the specific purpose given. There are no understandings, agreements, or representations, oral or written, not specified herein regarding this agreement.

6. **Contract Term and Renewal Option.** The NDDOT will enter into a contract with an effective date **beginning September 22, 2014, and ending July 31, 2015**, inclusive. This contract may be renewed upon satisfactory completion of the initial contract term. The NDDOT reserves the right to execute up to two options to renew this contract for a period of twelve (12) months each, not to exceed thirty-four (34) months total. Renewals will be documented by amendment.

The NDDOT reserves the right to renegotiate price and terms provided that such negotiated price and terms fall within the original scope of work for this bid. Negotiations may be conducted annually or at such times that

additional and unexpected services falling within the scope of the contract may occur. Such changes will be documented by amendment to the contract.

7. **Contract Termination.**

a. **Termination without Cause.** This contract may be terminated by mutual consent of both parties, or by either party upon 30 days' written notice.

b. **Termination for Lack of Funding or Authority.** The State may terminate this contract effective upon delivery of written notice to the contractor, or on any later date stated in the notice, under any of the following conditions:
   i. If funding from federal, state, or other sources is not obtained and continued at levels sufficient to allow for purchase of the services or supplies in the indicated quantities or term. The contract may be modified by agreement of the parties in writing to accommodate a reduction in funds.
   ii. If federal or state regulations or guidelines are modified, changed or interpreted in such a way that the services are no longer allowable or appropriate for purchase under this contract or are no longer eligible for the funding proposed for payments authorized by this contract.
   iii. If any license or certificate required by law or regulation to be held by the contractor to provide the services required by the contract is for any reason denied, revoked or not renewed.

   Any such termination of this contract under (i), (ii), or (iii), above, shall be without prejudice to any obligations or liabilities of either party already accrued prior to such termination.

c. **Termination for Cause.** The State by written notice to the contractor may terminate the whole or any part of this contract:
   i. If the contractor fails to provide services required by this contract within the time specified herein or any extension thereof; or
   ii. If the contractor fails to perform any of the other provisions of this contract, or so fails to pursue the work as to endanger performance of this contract in accordance with its terms and after receipt of written notice from the State, fails to correct such failures within ten days or such longer period as NDDOT may authorize.
   iii. The rights and remedies of the State provided in the above clause related to defaults by the contractor are not exclusive and are in addition to any other rights and remedies provided by law or under this contract.

d. **Termination, Deliveries.** If the contract is terminated for any reason, the contractor is responsible for delivery of all commodities and services ordered prior to the termination, unless those orders had been canceled by the Purchasing Agency or Entity.

8. **Contract Price Adjustment.** The Contract Unit Prices shall be firm for the twelve (12) months of the contract period. On an annual basis, all unit prices may be subject to price adjustment (increase / decrease). The request for a price adjustment shall be submitted to the Procurement Office at least forty five (45) days before the scheduled contract expiration date and must include justification for the proposed change. The Procurement Officer will respond as follows:

1) The request may be granted,
2) The contract may be cancelled and solicitation may be re-advertised, or
3) The contract may be continued without change.

If a price increase is approved by the NDDOT, the date the increase will be effective along with the new unit prices will be included in an amendment document. Approval of any price increase renews the twelve month firm price period.

The State shall also be advised of and receive the benefit of any price decrease. The same notification and review process will apply to a decrease in cost.

9. **Materials and Workmanship.** All material and workmanship shall be subject to inspection and testing at the discretion of the purchasing agency.

10. **Inspection and Investigations.** The State reserves the right to conduct inspections and investigations related to the bidder and offered commodities or services to make determinations regarding compliance with the bid requirements and responsibility of the bidder.

11. **Billing and Payment Procedures.** The initial order will be issued by the Procurement Office. Reorders may be placed by the individual NDDOT district locations during the contract period.

Invoices are to be submitted as indicated on the purchase orders unless otherwise instructed. Failure to submit correct invoices to the appropriate NDDOT office may delay contractor payment.

Payment will normally be made within thirty days after delivery and acceptance of commodities or services under this contract and receipt of a correct invoice. All invoice and payment inquiries must be directed to the purchasing agency.

12. **Subcontracts, Assignment.** The contractor shall not subcontract, assign or transfer the contractor's interests or duties under this contract without express written consent of the purchasing agency.

13. **Successors in Interest.** The provisions of this agreement shall be binding upon and shall inure to the benefit of the parties hereto, and their respective successors and assigns.

14. **Receiving.** Deliveries must arrive at the designated destination(s) during normal business hours unless other shipping/receiving instructions are issued by NDDOT personnel. The contractor shall contact the NDDOT to schedule delivery dates and times at least 24 hours in advance of delivery.

All NDDOT offices will be closed in recognition of State holidays. Any day declared a holiday by the President or Governor will also be recognized by office closure.

15. **Specifications. Bidder's shall submit detailed manufacturer's specifications along with this response,** and upon acceptance of the bid, shall become part of the bidder's specifications. Specifications must include: brand, composition, blade analysis, hardness rating, design, dimensions, weight, etc. Promotional literature is generally not adequate. Any discrepancies between products to be furnished on the bid and manufacturer's printed specification must be documented.

16. **Testing and acceptance.** Blades may be tested upon delivery to ensure compliance with specifications prior to payment. The testing procedure requires approximately sixty (60) days. Materials failing to meet specifications will be returned at the bidder's expense.

17. **Service Representative.** The contractor must provide a dedicated customer service representative to provide support for this contract. The contractor shall notify the Procurement Officer in the event the representative is changed.

NAME: **Terry A. Manway**
(Name of person servicing this contract)

BUSINESS NAME: **Kennametal Inc.**

MAILING ADDRESS: **P.O. Box 231 (Mail) 1600 Technology Way (Courier)**

CITY & STATE: **Latrobe, PA** ZIP CODE: **15650**

PHONE NUMBER: **412-215-1420** TOLL FREE: **800-564-9489**

FAX NUMBER: **724-539-5079** E-MAIL: **terry.manway@kennametal.com**

SECTIONAL TUNGSTEN CARBIDE INSERTED
SNOWPLOW ENCASED-IN RUBBER CUTTING EDGES, 6" HEIGHT, 5/8" HOLE-PUNCHING

Similar or equal to JOMA brand blades AND PolarFlex brand blades

Individual steel segments encased in rubber with steel bushings positioned on 12" centers to mount to a snow plow. Each segment is inserted with tungsten carbide bits, brazed in place along the wear edge. The finished blade is approximately 7/8" thick by 6" wide by 4' long. Steel bushings are located 1.5" from the top of the blade on 12" centers. Each blade will have orientation embossed in the rubber casing. A 1/2" X 3" clamp bar is mounted on top to hold the blade to the plow. The clamp bar should weigh approximately 5 lbs per foot and have 11/16" square holes located on 12" centers to align with the bushings in the blade. If supplying a product equivalent to JOMA or POLARFLEX, literature must be provided.

Option 1: Carbide impregnation is not required on the curb-runner guard.

Quantity	Unit	Detailed Specifications	Unit Price Each	Extended Price
JOMA 6000 ARTICULATING SYSTEM, LESS CURB-RUNNER GUARD NDDOT P/N 76006-367000 **Approved ALTERNATE**				
Reorder Unknown at time of bid	EA	FOB ANY NDDOT District	**10' System =** $ **11' System =** **12' System =**	**$1,936.90/ 10' System** $ **$2,119.70/ 11' System** **$2,302.50/ 12' System**
JOMA 6000 X 4' (39#) RUBBER EDGE – OR EQUAL NDDOT P/N 76006-367005				
150	EA	FOB NDDOT Fargo District 58103	$ **662.03**	$ **99,304.50**
36	EA	FOB NDDOT Bismarck District 58601	$ **662.03**	$ **23, 833.08**
97	EA	FOB NDDOT Minot District 58701	$ **662.03**	$ **64,216.91**
150	EA	FOB NDDOT Dickinson District 58601	$ **662.03**	$ **99,304.50**
Reorder Unknown at time of bid	EA	FOB ANY NDDOT District	$ **662.03**	**Quantity Unknown** $ **N/A**
JOMA 6000 X 3' RUBBER EDGE – OR EQUAL NDDOT P/N 76006-367006 **Approved ALTERNATE**				
50	EA	FOB NDDOT Fargo District 58103	$ **502.13**	$ **25,106.50**
3	EA	FOB NDDOT Bismarck District 58601	$ **502.13**	$ **1,506.39**
20	EA	FOB NDDOT Minot District 58701	$ **502.13**	$ **10,042.60**
60	EA	FOB NDDOT Dickinson District 58601	$ **502.13**	$ **30,127.80**
Reorder Unknown at time of bid	EA	FOB ANY NDDOT District	$ **502.13**	**Quantity Unknown** $ **N/A**
JOMA BS23901 4' BACK SUPPORT – OR EQUAL NDDOT P/N 76006-367010 **Approved ALTERNATE**				
28	EA	FOB NDDOT Bismarck District 58103	$ **69.37**	$ **1,942.36**
28	EA	FOB NDDOT Minot District 58701	**69.37**	$ **1,942.36**
Reorder Unknown at time of bid	EA	FOB ANY NDDOT District	$ **69.37**	**Quantity Unknown** $ **N/A**

Quantity	Unit	Detailed Specifications	Unit Price Each	Extended Price
JOMA BS23902 3' BACK SUPPORT – OR EQUAL NDDOT P/N 76006-367011 **Approved ALTERNATE**				
2	EA	FOB NDDOT Bismarck District 58103	$ 61.82	$ 123.64
5	EA	FOB NDDOT Minot District 58701	$ 61.82	$ 309.10
Reorder Unknown at time of bid	EA	FOB ANY NDDOT District	$ 61.82	Quantity Unknown $ N/A
JOMA STRAP 4SEH (20#) – OR EQUAL NDDOT P/N 76006-367015 **Approved ALTERNATE**				
28	EA	FOB NDDOT Bismarck District 58103	$ 36.10	$ 1010.80
28	EA	FOB NDDOT Minot District 58701	$ 36.10	$ 1010.80
Reorder Unknown at time of bid	EA	FOB ANY NDDOT District	$ 36.10	Quantity Unknown $ N/A
JOMA STRAP 3SEH (15#) – OR EQUAL NDDOT P/N 76006-367016 **Approved ALTERNATE**				
2	EA	FOB NDDOT Bismarck District 58601	$ 20.77	$ 41.54
5	EA	FOB NDDOT Minot District 58701	$ 20.77	$ 103.85
Reorder Unknown at time of bid	EA	FOB ANY NDDOT District	$ 20.77	Quantity Unknown $ N/A
OPTION 1 - JOMA CURB-RUNNER GUARD 663158PLH (LEFT) NDDOT P/N 76006-367020 **Approved ALTERNATE**				
Reorder Unknown at time of bid	EA	FOB ANY NDDOT District	$ 72.92	Quantity Unknown $ N/A
OPTION 2 - JOMA CURB-RUNNER GUARD 663158PRH (RIGHT) NDDOT P/N 76006-367020 **Approved ALTERNATE**				
Reorder Unknown at time of bid	EA	FOB ANY NDDOT District	$ 72.92	Quantity Unknown $ N/A

INITIAL ORDER DELIVERY DAYS ARO 45 days ARO

DELIVERY FOR REORDERS 45 days ARO DAYS

BIDDER KENNAMETAL INC.

Quantity	Unit	Detailed Specifications	Unit Price Each	Extended Price
X-48-W ASSEMBLY, 4' POLARFLEX FRONT MOUNT SYSTEM C/W 5/8" X 6" ADAPTER BLADES, 12' PLOW (3PER) – OR EQUAL				
Reorder Unknown at time of bid	EA	FOB ANY NDDOT District	$ **NO BID**	**NO BID** $
5/8" X 6" POLARFLEX XWS-12 ADAPTER BLADES – OR EQUAL NDDOT P/N 76006-367500				
36	EA	FOB NDDOT Bismarck District 58103	$ **NO BID**	$ **NO BID**
156	EA	FOB NDDOT Dickinson District 58601	$ **NO BID**	$ **NNO BID**
Reorder Unknown at time of bid	EA	FOB ANY NDDOT District	**NO BID** $	**NO BID** $
X-48-W-F, COMPLETE 4' SECTION, POLARFLEX – OR EQUAL				
1	EA	FOB NDDOT Dickinson District 58601	$ **NO BID**	$ **NO BID**
Reorder Unknown at time of bid	EA	FOB ANY NDDOT District	**NO BID** $	**NO BID** $
BUX-48-W, 4' ADAPTER BLADE, POLARFLEX – OR EQUAL				
3	EA	FOB NDDOT Dickinson District 58601	$ **NO BID**	$ **NO BID**
Reorder Unknown at time of bid	EA	FOB ANY NDDOT District	**NO BID** $	**NO BID** $
AUX-48, FRONT ANGLE – OR EQUAL				
3	EA	FOB NDDOT Dickinson District 58601	$ **NO BID**	$ **NO BID**
Reorder Unknown at time of bid	EA	FOB ANY NDDOT District	**NO BID** $	**NO BID** $
POLARFLEX CURB GUARD 10620029 – OR EQUAL				
Reorder Unknown at time of bid	EA	FOB ANY NDDOT District	**NO BID** $	**NO BID** $

INITIAL ORDER DELIVERY DAYS ARO N/A

DELIVERY FOR REORDERS N/A DAYS

BIDDER KENNAMETAL INC.

NORTH DAKOTA DEPARTMENT OF TRANSPORTATION
SPECIFICATIONS FOR
THROUGH-HARDENED STEEL MOTOR GRADER CUTTING EDGES

GENERAL SPECIFICATIONS:

1. Cutting edges must be cut in the lengths as specified herein.
2. Cutting edge ends shall be cleanly cut.
3. Cutting edges shall be uniformly through-hardened to Brinell hardness minimum of 400, (ASTM A370 & E18, AASHTO T70). Rating must be furnished with the bid.
4. Lengths, as noted on the proposal, shall not vary more than ± 1/8" specified in order to fit total moldboard length in various combinations.
5. Bidder must specify delivery dates.

GRADER CUTTING EDGES:

1. Size to be: Minimum wearing edge : "thick x 8" height x the designated length
2. Curved.
3. Painted.
4. Standard AASHTO punching.
5. If available, manufacturer's name, trademark, or identifying part number to be stamped in the non-wear area for warranty claim abilities.
6. Warranty replacement for breakage 2 for 1.

REFERENCE ATTACHMENT A DRAWING

THRU-HARDENED STEEL MOTOR GRADER EDGES
5/8" BOLT & HOLE PUNCH (unless noted otherwise)

5/8" x 8" Grader Through Hardened

BRAND NAME: N/A

MANUFACTURER: _____

LENGTH DOT PART NUMBER	REORDER PRICE LINEAL FOOT	
5FT 76006-361646	$ NO BID	DELIVERY FOR REORDERS _____ DAYS
6FT 76006-361653	$ NO BID	Prices are F.O.B. ANY NDDOT Destination.
7FT 76006-361778	$ NO BID	Minimum order quantity for this price = _____LF
8FT 76006-361786	$ NO BID	

1/2" x 8" Grader Through Hardened

BRAND NAME: N/A

MANUFACTURER: _____

LENGTH DOT PART NUMBER	REORDER PRICE LINEAL FOOT	
6FT-6FT 11" 76006-361661	$ NO BID	DELIVERY FOR REORDERS _____ DAYS
7FT-7FT 11" 76006-361752	$ NO BID	Prices are F.O.B. ANY NDDOT Destination.
8FT-8FT 11" 76006-361794	$ NO BID	Minimum order quantity for this price = _____LF

BIDDER KENNAMETAL INC.

NORTH DAKOTA DEPARTMENT OF TRANSPORTATION

SPECIFICATIONS FOR
THROUGH-HARDENED STEEL VEE-SNOWPLOW EDGE

GENERAL SPECIFICATIONS:

1. Cutting edges must be cut in the lengths as specified herein.
2. Cutting edge ends shall be square and cleanly cut.
3. Cutting edges shall meet minimum 25 Rockwell hardness on the Rockwell C-scale and Brinell hardness minimum 250. Rating must be furnished with the bid.
4. Lengths, as noted on the proposal, shall not vary more than ± 1/8" specified in order to fit total moldboard length in various combinations.
5. Bidder must specify delivery dates.

VEE-SNOWPLOW CUTTING EDGES:

1. Sizes and length as designated.
2. Flat.
3. Unpolished.

Brand Name: N/A		
Manufacturer:		
8" HEIGHT X 1/2" THICK		
LENGTH DOT PART NUMBER	**REORDER PRICE LINEAL FOOT**	
5FT 76006-368005	$ NO BID	DELIVERY FOR REORDERS _____ DAYS
5-1/2FT 76006-368054	$ NO BID	Prices are F.O.B. ANY NDDOT Destination.
6FT 76006-368104	$ NO BID	Minimum order quantity for this price = _____LF
7FT 76006-368153	$ NO BID	

BIDDER **KENNAMETAL INC.**

NORTH DAKOTA DEPARTMENT OF TRANSPORTATION

Surface Harden Cutting Edges

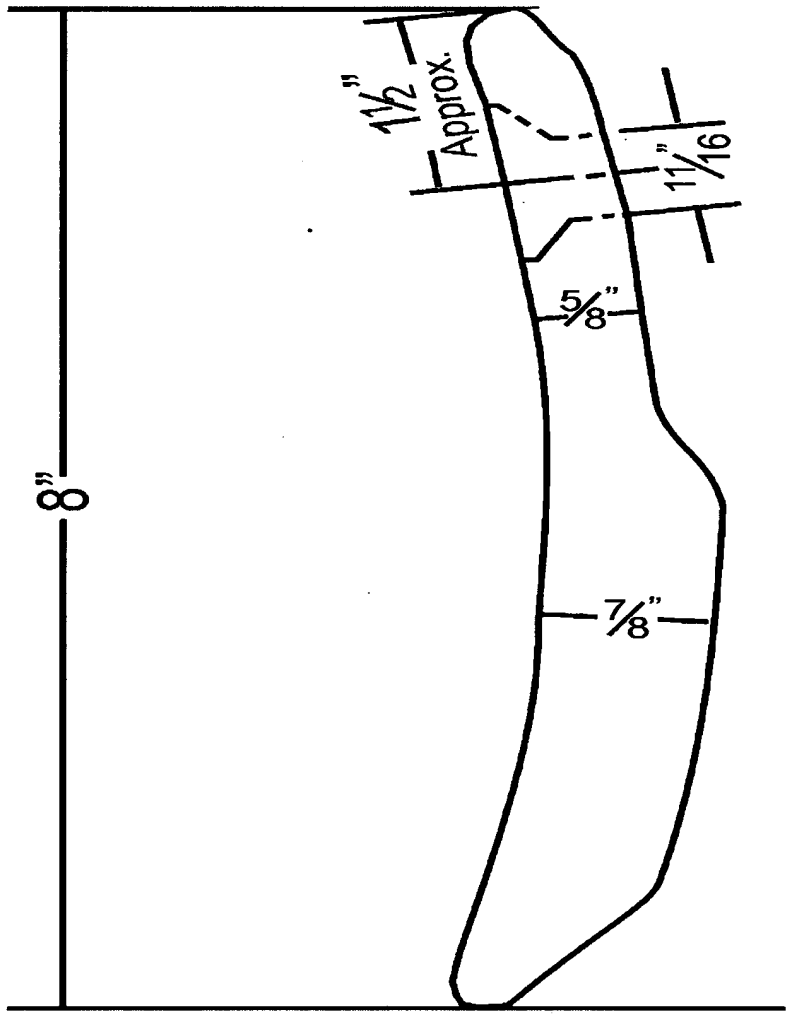

MOTOR GRADER

NORTH DAKOTA DEPARTMENT OF TRANSPORTATION

PUNCHING SPACE
SNOWPLOW CUTTING EDGES

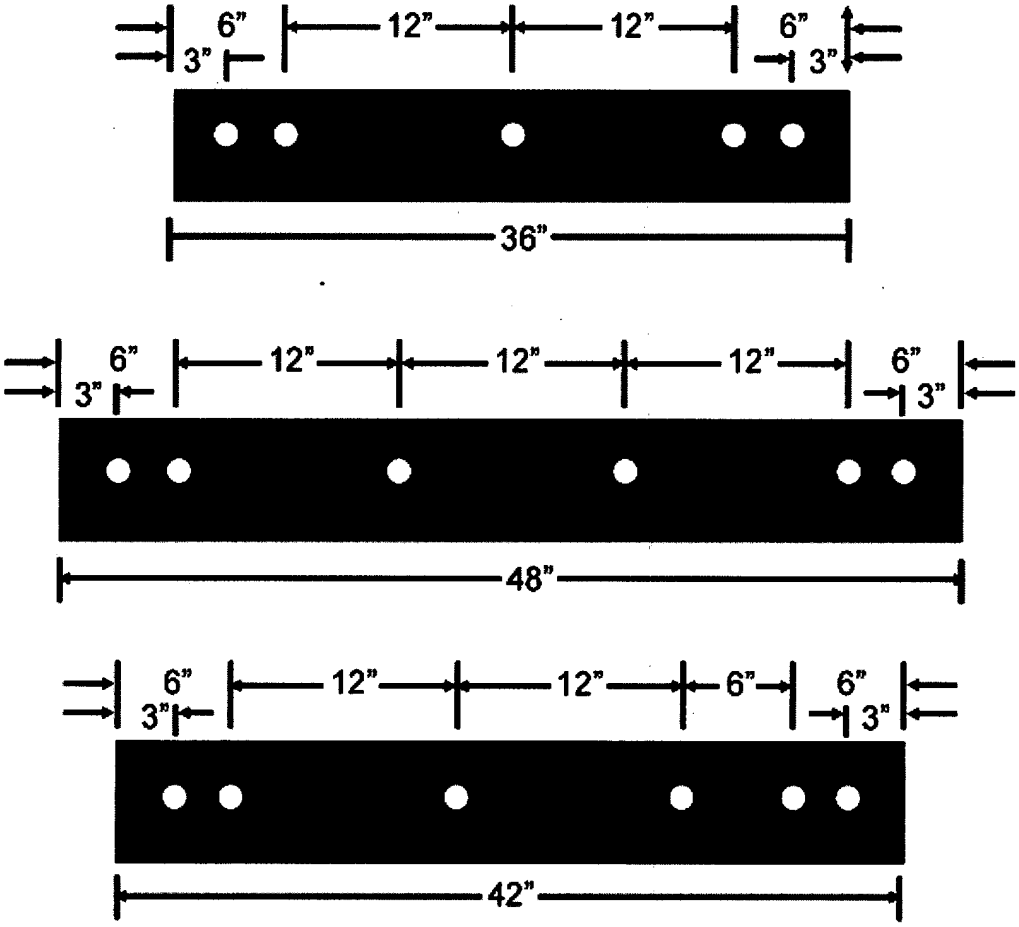

N.D. DEPT. OF TRANSPORTATION - PURCHASING CONTACTS AND SHIP TO ADDRESSES

61 – BISMARCK DISTRICT:
NDDOT - BISMARCK DISTRICT (701) 328-6941
218 S AIRPORT ROAD (701) 328-6933 FAX
BISMARCK ND 58504-6003
BETTY DeGREEF, STOREKEEPER

62 - VALLEY CITY DISTRICT:
NDDOT - VALLEY CITY DISTRICT (701) 845-8803
1524 8TH AVENUE SW (701) 845-8804 FAX
VALLEY CITY ND 58072-4200
RENEE HAZELTON, STOREKEEPER

63 - DEVILS LAKE DISTRICT:
NDDOT - DEVILS LAKE DISTRICT (701) 665-5119
316 6TH ST SE (701) 328-0329 FAX
DEVILS LAKE ND 58301
LISA VETSCH, STOREKEEPER

64 –MINOT DISTRICT:
NDDOT - MINOT DISTRICT (701) 857-6928
1305 HIGHWAY 2 BYPASS EAST (701) 857-6932 FAX
MINOT ND 58701-7922
LINDA KILLMER, STOREKEEPER

65 –DICKINSON DISTRICT:
NDDOT - DICKINSON DISTRICT (701) 227-6525
1700 3RD AVENUE W SUITE 101 (701) 227-6505 FAX
DICKINSON ND 58601-3009
SHARON PRIVRATSKY, STOREKEEPER

66 -GRAND FORKS DISTRICT:
NDDOT - GRAND FORKS DISTRICT (701) 787-6521
1951 NORTH WASHINGTON (701) 787-6515 FAX
PO BOX 13077
GRAND FORKS ND 58208-3077
GEORGE PALO, STOREKEEPER

67 –WILLISTON DISTRICT:
NDDOT - WILLISTON DISTRICT (701) 774-2721
605 DAKOTA PARKWAY WEST (701) 774-2704 FAX
PO BOX 698
WILLISTON ND 58802-0698
SUSAN PERCOSKI, STOREKEEPER

68 –FARGO DISTRICT:
NDDOT - FARGO DISTRICT (701) 239-8914
503- 38TH STREET SOUTH (701) 239-8915 FAX
FARGO ND 58103-1198
TIMOTHY HAAGENSTAD, STOREKEEPER

NORTH DAKOTA DEPARTMENT OF TRANSPORTATION
CIVIL RIGHTS APPENDIX

During the performance of this contract, the contractor, for itself, its assignees, and successors in interest (hereinafter referred to as the Contractor), agrees as follows:

1. Compliance with Regulations: The Contractor shall comply with the regulations relative to nondiscrimination in federally-assisted programs of the Department of Transportation, Title 49, Code of Federal Regulations, Part 21, as they may be amended from time to time (hereinafter referred to as the Regulations), which are herein incorporated by reference and made a part of this contract.

2. Nondiscrimination: The Contractor, with regard to the work performed by it during the contract, shall not discriminate on the grounds of race, color, national origin, sex, age, disability/handicap, or income status**, in the selection and retention of subcontractors, including procurements of materials and leases of equipment. The Contractor shall not participate, either directly or indirectly, in the discrimination prohibited by Section 21.5 of the Regulations, including employment practices when the contract covers a program set forth in Appendix B of the Regulations.

3. Solicitations for Subcontracts, Including Procurements of Materials and Equipment: In all solicitations, either by competitive bidding or negotiation, made by the Contractor for work to be performed under a subcontract, including procurements of materials or leases of equipment, each potential subcontractor or supplier shall be notified by the Contractor of the Contractor's obligations under this contract and the Regulations relative to nondiscrimination on the grounds of race, color, national origin, sex, age, disability/handicap, or income status.**

4. Information and Reports: The contractor shall provide all information and reports required by the Regulations, or directives issued pursuant thereto, and shall permit access to its books, records, accounts, other sources of information and its facilities as may be determined by the North Dakota Department of Transportation or the Federal Highway Administration to be pertinent to ascertain compliance with such Regulations, orders, and instructions. Where any information required of a Contractor is in the exclusive possession of another who fails or refuses to furnish this information, the Contractor shall so certify to the North Dakota Department of Transportation, or the Federal Highway Administration, as appropriate, and shall set forth what efforts it has made to obtain the information.

5. Sanctions for Noncompliance: In the event of the Contractor's noncompliance with the nondiscrimination provisions of this contract, the North Dakota Department of Transportation shall impose such contract sanctions as it or the Federal Highway Administration may determine to be appropriate, including but not limited to:

   a. withholding of payments to the Contractor under the contract until the Contractor complies, and/or
   b. cancellation, termination, or suspension of the contract, in whole or in part.

6. Incorporation of Provisions: The Contractor shall include the provisions of paragraphs 1 through 6 in every subcontract, including procurements of materials and leases of equipment, unless exempt by the Regulations or directives issued pursuant thereto.

The Contractor shall take such action with respect to any subcontract or procurement as the North Dakota Department of Transportation or the Federal Highway Administration may direct as a means of enforcing such provisions, including sanctions for noncompliance provided, however, that in the event a Contractor becomes involved in, or is threatened with, litigation by a subcontractor or supplier as a result of such direction, the Contractor may request the North Dakota Department of Transportation to enter into such litigation to protect the interests of the State; and, in addition, the Contractor may request the United States to enter into such litigation to protect the interests of the United States.

**The Act governs race, color, and national origin. Related Nondiscrimination Authorities govern sex, 23 U.S.C. 324; age, 42 U.S.C. 6101; disability/handicap, 29 U.S.C. 790; and low income, E.O. 12898.

Risk Management Appendix

Supply Contracts with Private Individuals, Companies, Corporations, Etc.:

Each party agrees to assume its own liability for any and all claims of any nature including all costs, expenses and attorney's fees which may in any manner result from or arise out of this agreement.

Contractor, or Contractor's delivery agent, shall secure and keep in force during the term of this agreement, from insurance companies, government self-insurance pools or government self-retention funds authorized to do business in North Dakota, the following insurance coverages:

1) **Commercial general liability** and **automobile liability** insurance.
2) **Workers compensation** insurance.

Contractor shall produce certificates of insurance or copies of insurance policies upon request by the State.

When a portion of a Contract is sublet, the Contractor shall obtain insurance protection (as outlined above) to provide liability coverage to protect the Contractor and the State as a result of work undertaken by the Subcontractor. In addition, the Contractor shall ensure that any and all parties performing work under the Contract are covered by public liability insurance as outlined above. All Subcontractors performing work under the Contract are required to maintain the same scope of insurance required of the Contractor. The Contractor shall be held responsible for ensuring compliance with those requirements by all Subcontractors.

RM Consulted 2007
Revised 6-07

NDDOT
North Dakota
Department of Transportation

IRONHAWK

INDUSTRIAL DISTRIBUTION

IRONHAWK LAKE EFFECT™ PLOW BLADE ASSEMBLY SPECIFICATIONS

General Specifications

The Lake Effect™ plow blade consists of individual steel segments milled and tungsten-carbide inserts brazed in place along the wear edge. The segments are encased in polyurethane with steel bushings to allow the blade to conform to the road surface. This product is **made in the USA.**

Finished Specifications

Finished blade shall be approximately .875" thick by 6" wide 3 or 4 foot long with .6875" ID steel bushing 1.5" from top of blade. The bushing (bolt) spacing shall be 6"-12"-12" on 3 foot blade and 6"-12"-12"-12" on a 4 foot blade to accommodate mounting to the plow. The finished blade sections shall have marking showing the front edge of the blade to avoid improper mounting. Assembly shall include a 3" wide steel clamp bar that mounts over the Lake Effect™ blade to hold to plow. 6"-12" bolt spacing of the clamp bar aligns with bushings in the blade.

Steel Segments

- Steel end segment .75" thick x 5.75" wide x 5.459" long (distinct hourglass design).
- Steel center segment .75" thick x 5.75" wide x 11.06" long (distinct hourglass design).
- Milled groove for the carbide inserts in the center of the segment edge.
- 3' blade shall consist of 2 end segments and 2 center segments. Finished blade weight – 34.1lbs
- 4' blade shall consist of 2 end segments and 3 center segments. Finished blade weight – 45.6lbs
- Segment shall have a grooved, horizontal wear line indicator

Tungsten Carbide Inserts

- Kennametal high shock WC grade tungsten carbide grade K3030C.
- Carbide rectangular in shape 9.652 mm thick, 19.18 mm tall and 25.65 mm long.
- Insert weight approximately 70.1 grams.
- Cobalt content 11-12.5%.
- Density 14.1 minimum to 14.6 maximum.
- Transverse rupture strength 350,000 psi minimum.
- Hardness 87.5 minimum to 89.0 maximum (Rockwell A scale).

Brazing

- Each insert shall contain approximately 1" of carbide insert for each 1" of steel.
- Uses Kennametal proprietary 3958436 braze material or functional equivalent with 30,000 PSI shear strength which has proven to be a superior performing material in Kennametal snow plow blades for many years.
- Carbide shall be placed in line within the milled channel.

The above information is proprietary and confidential

1090 East 222nd Street Euclid, Ohio 44117 (888) 843-8612 (216) 481-1156 fax **Sales@IronhawkIndustrial.com**

Brazing (continued)

- The carbide inserts shall be brazed on all sides in contact with the steel with no evidence of voids or use of shims.
- Carbide tip points shall not exceed .03125 between highest and lowest point within the blade.
- Finished goods shall comply with standard manufacturing tolerances.

Urethane Over-Mold Physical Properties

- Ultimate elongation 700%
- 300% secant modulus 500 PSI (ratio of stress to strain).
- Tensile strength 4000 PSI.
- Shore A durometer 75.
- Tear strength die C 280 PLI.
- Compression set 35%.
- Bayshore rebound 38%.

Steel Adaptor Blade

- Blade size ¾" x 4" three and four foot long.
- Blade shall be flat hot-rolled finished steel to meet or exceed specifications for A36 or type 1020 steel.
- Blade shall have end holes counter sunk for mounting to the mold board the other holes will be drilled 11/16" thru hole with punch pattern 6"-12" for mounting the lake effect.
- Dimensional tolerance between holes is +/- 1/16" non-accumulative from center to center across total length of blade.
- Finished blade sections shall have marking showing the front edge of the blade to avoid improper mounting.

Steel Clamp Bar

- Clamp bar size ½" x 3" three and four foot long
- Clamp bar shall be A572 steel
- Clamp bar shall be 11/16"square punched for .625" carriage bolts, spacing to be 6"-12"-12" at 1-1/2" gauge

Lake Effect™ Curb Guard

- Steel high impact grade A36 hot rolled bar stock .75" thick.
- Bolt holes drilled and counter sunk on 6"-12" punch pattern to accept .625 plow bolts.
- Curb protection end is AR500 wear resistant steel with hard-surface weld.

The above information is proprietary and confidential

IRONHAWK

INDUSTRIAL DISTRIBUTION

Advantages of our Lake Effect Plow Blade Components

Carbide Inserted Adaptor Blades (Front & Underbody versions)

- Provide increased back support for the Lake Effect blade
- Are designed to wear on Carbide Adapter blade when Lake Effect blade is worn out. Adds protection against moldboard damage

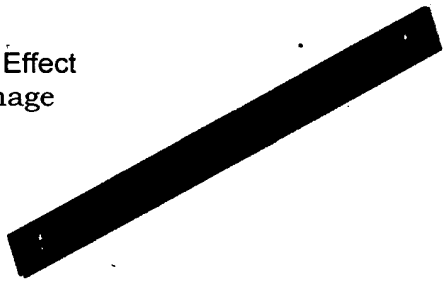

Lake Effect Guard

- Adds blade and plow end protection
- The guard end is made of durable steel and carbide weld material
- Both Adaptor blade and Curb Runners prevent the L.E. Blade from being over loaded

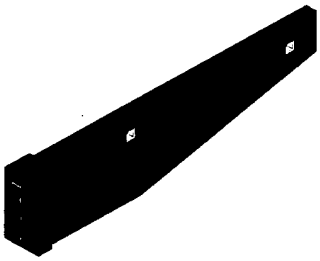

Lake Effect Center Guard

- Helps prevent damage to the center section, usually caused by expansion joints or other obstructions
- Will not hinder the performance of the Lake Effect blade

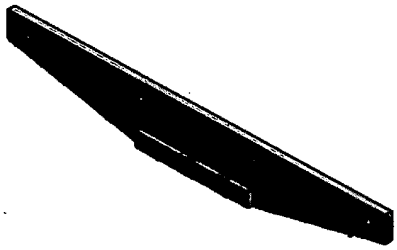

*****Lake Effect components are interchangeable with JOMA blade components**

PHONE: 1-888-843-8612 FAX: 216-481-1156 EMAIL : Sales @Ironhawkindustrial.com

THE INFORMATION CONTAINED IN THIS DRAWING IS THE SOLE PROPERTY OF IRONHAWK INDUSTRIAL DISTRIBUTION. ANY REPRODUCTION IN PART OR WHOLE WITHOUT THE WRITTEN PERMISSION OF IRONHAWK INDUSTRIAL DISTRIBUTION IS PROHIBITED.

THIS PRODUCT IS COVERED BY ONE OR MORE OF THE FOLLOWING U.S. PATENTS
Patent App #13832656 March 15, 2013

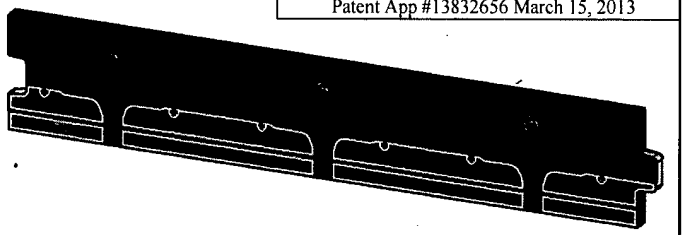

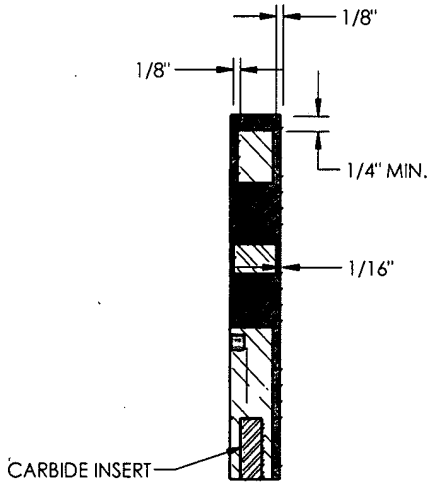

SECTION B-B

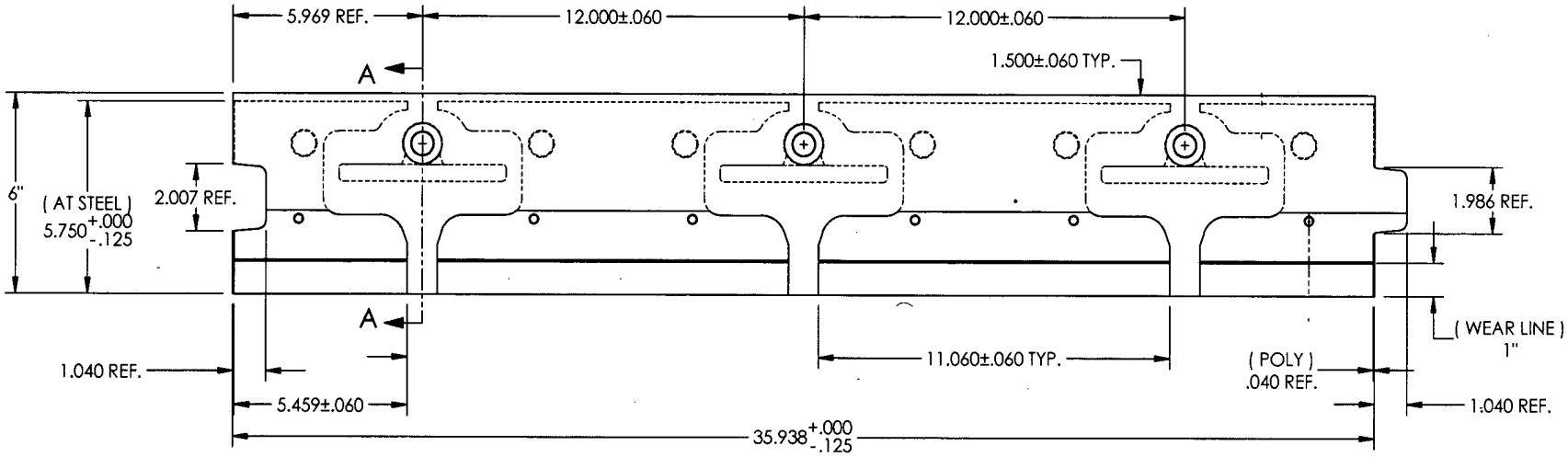

CAL. WT. 34.1 LBS.

PROPRIETARY & CONFIDENTIAL INFORMATION

THE INFORMATION CONTAINED IN THIS DRAWING IS THE SOLE PROPERTY OF IRONHAWK INDUSTRIAL DIST. ANY REPRODUCTION IN PART OR WHOLE WITHOUT THE WRITTEN PERMISSION OF IRONHAWK INDUSTRIAL DIST. IS PROHIBITED.

THIS PRODUCT IS COVERED BY ONE OR MORE OF THE FOLLOWING U.S. PATENTS
Patent App #138326563 March 15, 2013

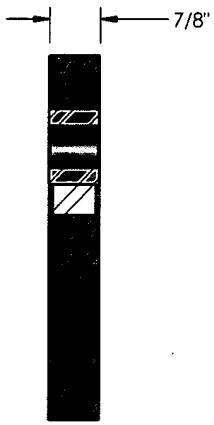

SECTION A-A

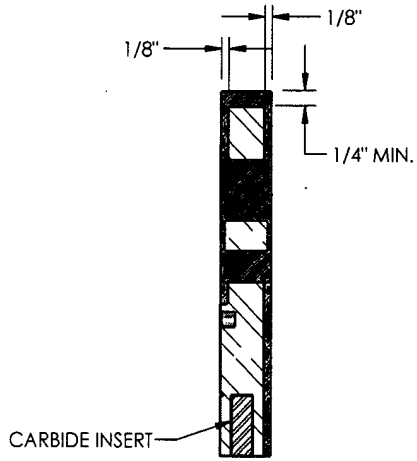

SECTION B-B

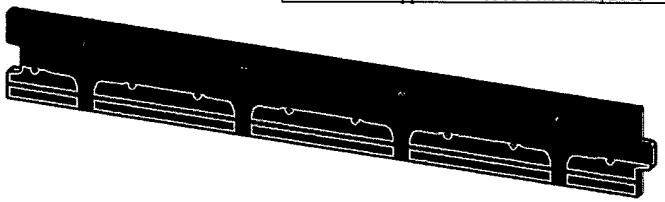

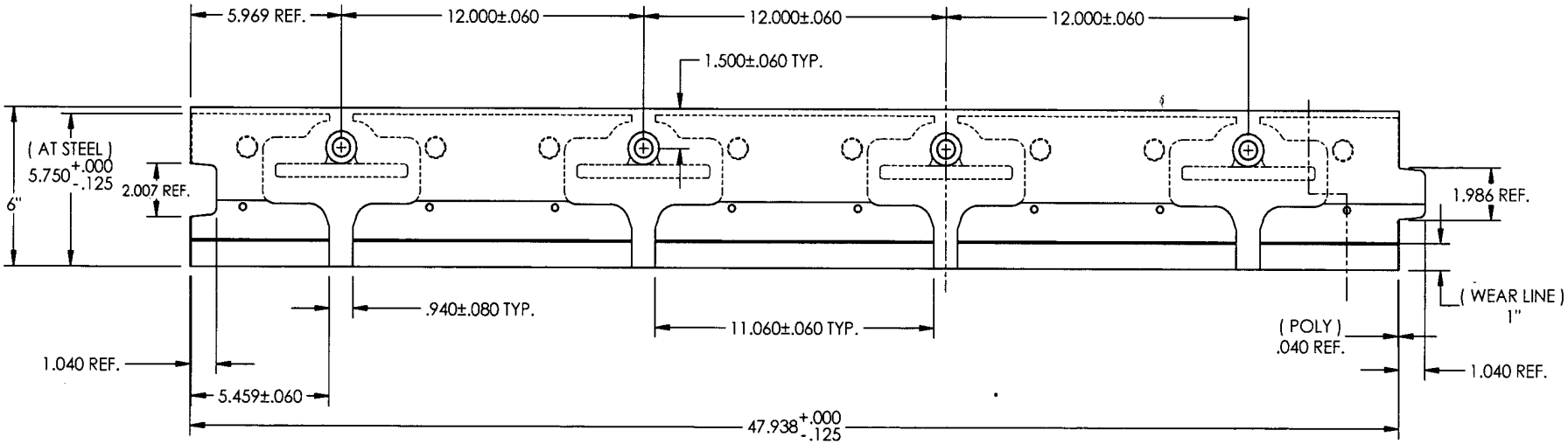

CAL. WT. 45.6 LBS.

PROPRIETARY & CONFIDENTIAL INFORMATION

NDDOT Contract No. 50141404A

North Dakota Department of Transportation

AMENDMENT TO CONTRACT NO. 50141404

Project No.

THIS AMENDMENT to the above-referenced contract is entered into by and between the State of North Dakota, acting through its Director of Transportation, hereinafter known as NDDOT, whose address is 608 East Boulevard Avenue, Bismarck, North Dakota 58505-0700, and Kennametal, Inc., hereinafter known as the Contractor, whose address is 1600 Technology Way, Latrobe, Pennsylvania, 15650.

WHEREAS, the parties entered into a contract on September 17, 2014; and

WHEREAS, the Contractor has performed satisfactorily under the terms of the contract; and

WHEREAS, the Contractor has expressed a willingness to extend the term of the above-referenced contract for an additional twelve (12) month period; and

NOW THEREFORE, the Contractor and NDDOT agree that the term of the contract is extended through July 31, 2016.

All other terms and conditions of the above-referenced contract are incorporated herein by reference and remain in full force and effect.

EXECUTED the date last below signed.

WITNESS:

Jackie Zitt
NAME (TYPE OR PRINT)

Jackie Zitt
SIGNATURE

To be signed by **Owner; Partner; Corp. Pres., Vice Pres., or other authorized Corp. Officer.** (If signed by other authorized Corp. Officer, please attach copy of Power of Attorney or other documentation showing authority to sign.)

CONTRACTOR:

Kennametal Inc.
COMPANY NAME

Kevin Nowe
OFFICER'S NAME (TYPE OR PRINT)

Kevin Nowe
SIGNATURE

Vice President
TITLE

7-28-15
DATE

WITNESS:

Sondra Goebel
NAME (TYPE OR PRINT)

Sondra Goebel
SIGNATURE

NORTH DAKOTA DEPARTMENT OF TRANSPORTATION

Grant Levi
DIRECTOR (TYPE OR PRINT)

Grant Levi
SIGNATURE

7/28/15
DATE

APPROVED as to substance by:

Brad Darr
DIVISION DIRECTOR (TYPE OR PRINT)

Brad Darr
SIGNATURE

7-27-15
DATE

CLA 52494 (Div. 08)
L.D. Approved 5-19-00; 5-03

APPROVED as to execution this 20 day of July 20 15
ATTORNEY GENERAL
By [signature]
SPECIAL ASST. ATTORNEY GENERAL

NDDOT
North Dakota Department of Transportation